ZOOK®

FA Series

Forward-Acting Rupture Disk System

Safety through **knowledge** and **performance**.

FA Series
Forward-Acting Rupture Disk System

In a continued effort to provide cutting edge products and technologies for rupture disk users, ZOOK is pleased to introduce our FA Series of rupture disks and holders. The FA Series offers one unique holder design for use with multiple types of ZOOK Forward-Acting metal rupture disks.

Rupture Disk Holder Features

- FAH Series offers one unique holder design that fits with ZOOK Forward-Acting metal rupture disks (FAC, FAX)
- Pre-Torque Design allows for:
  - a) Pre-assembly of a rupture disk into a holder prior to field installation
  - b) Removal of the assembly from the piping system for inspection without disturbing the seal integrity of the rupture disk
  - c) Pre-torque bolts properly seat the disk by engaging the holder bite
- Disk Dome is contained within holder's outlet, which prevents damaging the disk during installation into mating flanges
- Locating Pin allows only forward-acting type disks to be mounted into holder
- Fluoropolymer coated socket head cap screws resists corroding to holder assembly and provides easy removal without special sockets
- Polyethylene cap screw covers prevents debris from building up in cap screw head
- Sizes 1" thru 12"
- Standard holder materials: Carbon Steel (WCB), Stainless Steel (CF3M), Hastelloy (CW12MW)

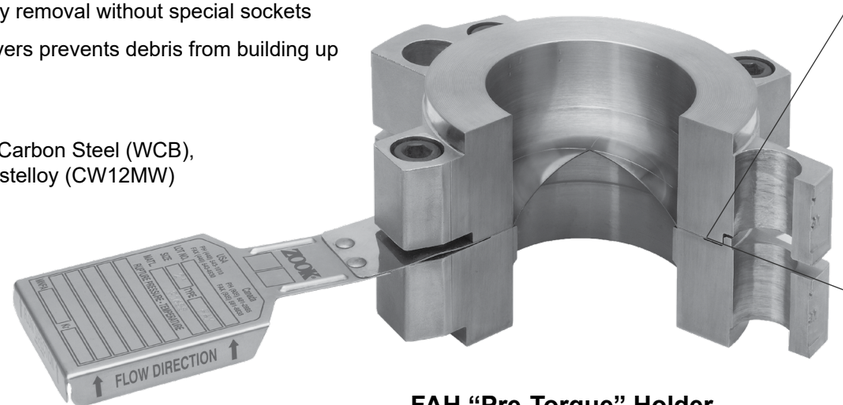

FAH "Pre-Torque" Holder

- Holder information is permanently affixed to the O.D. of holder
- Bubble tight metal-to-metal bite and disk seal
- Flow direction arrows on disk tag and holder provides permanent visual verification that holder assembly is properly oriented in the piping system
- ANSI, DIN, and JIS Flange class and type specific, guards against installing an assembly into mating flanges with a different pressure rating than the rupture disk holder
- Positioning hole in mounting lug is located in the exact position as the mating flange and allows for proper alignment. It can also be used as an extra "hand" when installing into horizontal piping
- For custom materials and alternative flanges (types/ratings) ZOOK offers custom inserts (FAHI) or full flanges (FAH7) and custom overall heights

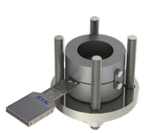

FAHI (Insert holder)

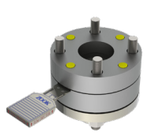

FAH7 (Full flanged pre-torque holder)

FAC Options

FAC-V* **Vacuum Supports** are required on vacuum services. Vacuum supports are attached to the process side of the disk and allow the disk to support a full system vacuum

FAC-R* **Protective Rings** are recommended with FAC Series Disks to protect delicate materials and/or to provide stability when vacuum supports are not supplied

FAC-H* **Handling Supports** are attached to the process side of the disk to protect disk seals when vacuum supports are not supplied

FAC-BI* Equipped with ZOOK's Integral **Burst Indicator**

FAX Options

FAX-L* A process side **PFA Teflon liner** provides protection from corrosive media.

FAX-BI* Equipped with ZOOK's Integral **Burst Indicator**

*Note: The maximum temperature rating of rupture disks supplied with liners or seal and BI's is lower than the base disk material

Certified Flow Resistance Factors (Kr)

Type	Krl (Liquid)	Krg (Gas)
FAX Series	1.78	0.39

FAC Rupture Disk Features

- The FAC series is a slotted metal top section and allows the use of metal & teflon seal materials. A wide variety of corrosive resistant seal materials are available
- State-of-the-art laser slotted metal burst cap
- Operating ratios up to 85% of the low end of burst tolerance
- Unique alignment pin design ensures proper disk orientation into FAH series disk holder
- Disk design offers high cycle life
- Excellent for liquid, gas or 2 phased flow
- Wide range of standard and exotic materials available
- Sizes from 1" (25mm) through 12" (300mm)
- Burst ratings from 3 psig (0.21 barg) to 2500 psig (172.37 barg)
- 3-dimensional stainless steel tag permanently engraved with complete disk specifications
- CE (PED), and TÜV compliance available

FAX Rupture Disk Features

- A Fail-Safe Design. If the disk is damaged or incorrectly installed, it will always burst at or below the marked burst rating as indicated on the disk tag
- Designed for Non-fragmentation
- Operating ratios up to 90% of the low end of burst tolerance
- Disk design offers high cycle life
- Excellent for liquid, gas or 2 phased flow
- Standard manufacturing design range and total tolerance ensures marked rating on disk tag does not exceed the MAWP of equipment
- Withstands full vacuum without vacuum support
- Wide range of standard and exotic materials available
- Sizes from 1" (25mm) through 12" (300mm)
- Burst ratings from 45 psig (3.10 barg) to 3600 psig (248.28 barg)
- Resists product build-up. The smooth concave side of the disk is exposed to the process media
- Unique alignment pin design ensures proper disk orientation into FAH Series disk holder
- 3-dimensional stainless steel tag permanently engraved with complete disk specifications
- ASME UD, CE (PED), and TÜV compliance available

FAH Series Specifications

Holder Dimensions / Specifications

Nominal Size	Available Flange Class* (ANSI / DIN)	Minimum Height◆ (in. / mm)	Standard Height (in. / mm)			Weight (Short Pattern) (lbs / kgs)	Number of Cap Screws	Cap Screws Hex Size (in.)	Gauge tap (NPT) (in.)
			Short Pattern FAH	Mid Pattern FAH-LP1	Long Pattern FAH-LP2				
1"	150/300/600	1-9/16	2-1/8	2-11/32	2-9/16	3.8 lbs	4	3/16	1/8, 1/4 ▲
25 mm	10/16/25/40	39.68	53.97	59.53	65.09	1.72 kgs	4	3/16	1/8, 1/4
1-1/2"	150/300/600	1-11/16	2-1/4	2-29/32	3-9/16	6.4 lbs	4	1/4	1/8, 1/4
40 mm	10/16/25/40	42.86	57.15	73.82	90.49	2.9 kgs	4	1/4	1/8, 1/4
2"	150/300/600	2-5/32	2-23/32	3-15/16	5-5/32	9.0 lbs	4	5/16	1/8, 1/4, 1/2
50 mm	10/16/25/40	54.77	69.06	100	130.97	4.08 kgs	4	5/16	1/8, 1/4, 1/2
2-1/2"	150/300/600	2-9/16	3-1/8	4-15/16	6-23/32	16.6 lbs	4	3/8	1/8, 1/4, 1/2
65 mm	10/16/25/40	65.09	79.38	125.41	170.66	7.5 kgs	4	3/8	1/8, 1/4, 1/2
3"	150/300/600	2-9/16	3-1/8	4-15/16	6-23/32	16.6 lbs	4	3/8	1/8, 1/4, 1/2
80 mm	10/16/25/40	65.09	79.38	125.41	170.66	7.5 kgs	4	3/8	1/8, 1/4, 1/2
4"	150/300	2-19/32	3-5/32	5-31/32	8-3/4	22.5 lbs	4	3/8	1/8, 1/4, 1/2
100 mm	10/16/25/40	65.88	80.17	151.61	222.25	10.2 kgs	4	3/8	1/8, 1/4, 1/2
6"	150/300	3-7/32	3-7/16	6-25/32	10-3/32	36.00 lbs	8	5/16	1/8, 1/4, 1/2
150 mm	10/16/25/40	81.76	87.31	172.24	256.38	16.33 kgs	8	5/16	1/8, 1/4, 1/2
8"	150/300	4-1/16	4-5/8	9-1/32	13-15/32	53.4 lbs	8	3/8	1/8, 1/4, 1/2
200 mm	10/16	103.19	117.48	229.39	342.11	24.22 kgs	8	3/8	1/8, 1/4, 1/2
10"	150	4-3/4	5-21/32	11-5/32	16-11/16	99.8 lbs	12	3/8	1/8, 1/4, 1/2
250 mm	10/16	120.65	143.67	283.37	423.86	45.27 kgs	12	3/8	1/8, 1/4, 1/2
12"	150/300	5-1/16	6-17/32	13-5/32	19-25/32	136.00 lbs	12	1/4	1/8, 1/4, 1/2
300 mm	10/16	128.59	165.89	334.17	502.44	61.69 kgs	12	1/4	1/8, 1/4, 1/2

Notes:
* Holders are also available to fit JIS flanging. Contact ZOOK for details
◆ Minimum height specified in table above will maintain the pre-torque feature of the rupture disk holder
. Refer to ASME/ANSI B16.5 pipe flanges and flange fittings (Table 2) for max allowable pressure/temperature ratings per flange class
▲ Gauge tap size needs to be reviewed with factory for reduced 1" FAH-G holders

Options / Accessories

Short / Mid / Long Pattern
- Can be machined to meet existing piping specifications
- Prevents rupture disk membrane from protruding beyond the outlet holder after burst

Replacement Fluoropolymer Coated Cap Screws

Cap Screw Specifications**	
Type	Socket Head
Material	Alloy Steel
Hardness	38-43-RC
Threads	UNRF 3A

** Required to meet Pre-Torque specifications

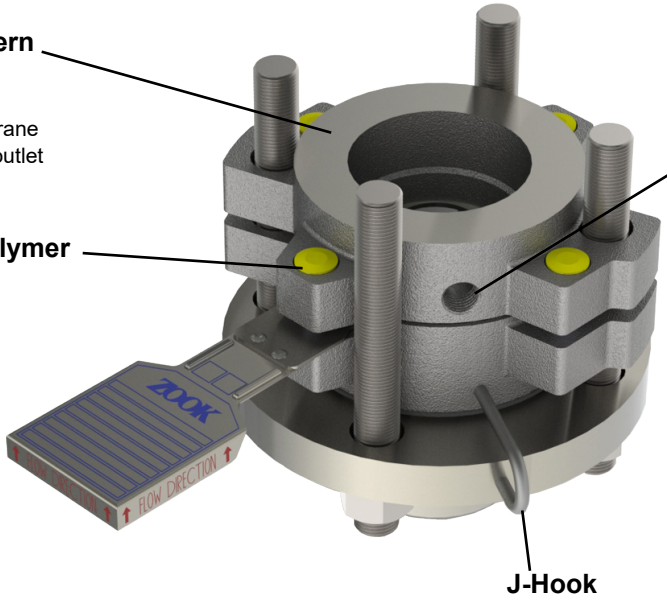

Eye Bolt
- To assist in lifting

Gauge Tap
- Used for monitoring pressure/temperature at rupture disk location
- Also available on inlet holder

PTFE Sleeved Holder Inlet
- Ideal for corrosive applications and reducing product build-up (Refer to PTFE Sleeved Holder Inlet Data Sheet)

Tantalum Coating
- Ideal for extreme corrosive applications and higher temperatures

Teflon - Trademark of The Chemours Company
Hastelloy - Trademark of Haynes International

ZOOK is committed to finding pressure relief solutions for our customers that maximize their productivity and performance while keeping them safe. ZOOK is a global market leader with over 90 years of manufacturing expertise of high quality metal & graphite rupture disks and other pressure relief products. ZOOK has global locations in the USA, United Kingdom, Canada and Malaysia, with state-of-the-art manufacturing facilities in Canada and the USA.

Our products are sold in 65+ countries and to-date have over 6,000 customers buying our products worldwide.

We are dedicated to investing heavily in the latest technology and production to stay competitive in the marketplace, and are able to offer comprehensive solutions to the selection and sizing of products best suited for each customer application.

SERVING AMERICA, CENTRAL & SOUTH AMERICA
16809 Park Circle Drive
Chagrin Falls, Ohio 44022
United States

Toll Free: +1 800 543 1043
Phone: +1 440 543 1010
E-mail: sales@zookdisk.com
Website: www.zookdisk.com

SERVING EUROPE, MIDDLE EAST & AFRICA
Navigation House, Bridge Street
Killamarsh, Sheffield S21 1AL
United Kingdom

Phone: +44 (0) 1909 560999
E-mail: sales.europe@zookdisk.com
Website: www.zookdisk.com

ALL OTHER INTERNATIONAL INQUIRIES
E-mail: sales@zookdisk.com

SERVING CANADA
4400 South Service Road
Burlington, Ontario L7L 5R8
Canada

Toll Free: +1 800 370 6057
Phone: +1 905 681 2885
E-mail: sales.canada@zookdisk.com
Website: www.zookdisk.com

SERVING ASIA PACIFIC
Menara LGB TTDI
Unit 6-3A, Level 6, Menara LGB,
No. 1, Jalan Wan Kadir, Taman Tun Dr. Ismail,
60000 Kuala Lumpur,
Malaysia

Phone: +603 2706 0098
E-mail: sales.asia@zookdisk.com
Website: www.zookdisk.com

FA_052025